Tesi Single Lever Basin Mixer, with Pop-Up Waste

ILLUSTRATED

A6592 Tesi single lever basin mixer with pop-up waste and 5 litre per minute eco flow regulator

OPTIONS

A5900 TMV thermostatic mixing valve, 15mm

ILLUSTRATED PRODUCT DETAILS

Weights

A6592 1.71 KG

Materials

A6592 Chrome Plated Metal

Finishes

A6592 Chrome (AA)

Flow rates

A6592 5 Litres per minute @ 3 bar pressure

Designer

Artefakt Industriekultur

Standards

BS EN817

Special Notes

Suitable for balanced supplies. Inlets with flexible hoses and 15mm compression connections. Factory fitted 5 litre per minute flow regulator. Unregulated flow rate 4.3 litres per minute at 0.3 Bar. Consideration should be given to safe hot water delivery and the use of an appropriate temperature reduction device, please see A5900AA (for use with 15mm pipework) or A5901AA (for use with 22mm pipework).

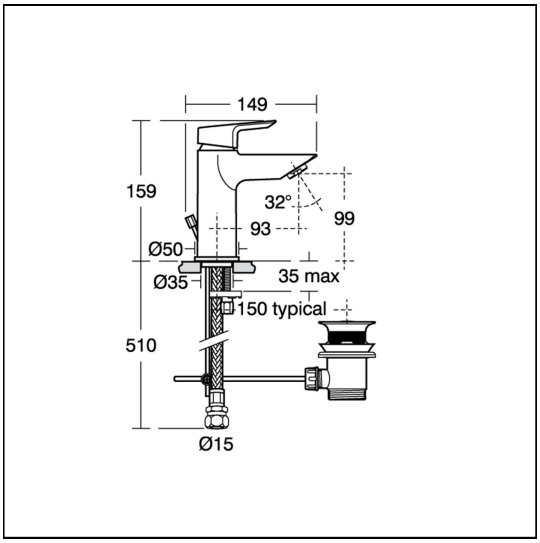

ACCREDITATIONS

WRAS APPROVED PRODUCT
1610050

FEATURES

Ideal Standard (UK) Ltd. makes every effort to ensure that the information provided on its website is accurate. However, we cannot guarantee this, and accept no liability for any information or advice given via its website.

Ideal Standard